THIS COPY IS PROVIDED ON A RESTRICTED BASIS AND IS NOT TO BE USED IN ANY WAY DETRIMENTAL TO THE INTERESTS OF PANDUIT CORP.

PANDUIT PART NUMBER	WEIGHT
GR12X4X24PG	5.50 LB/EA (2495g/EA)

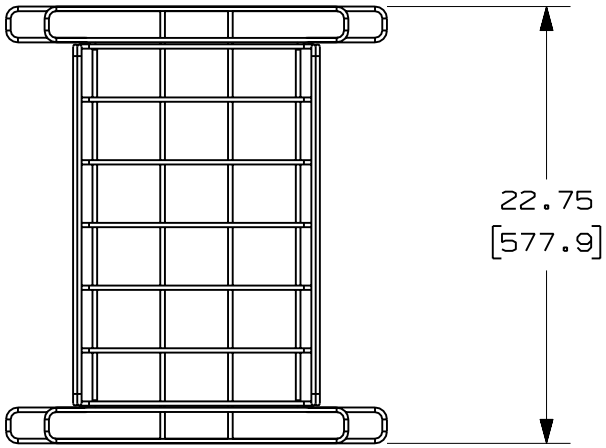

NOTES:

1. SEE CURRENT CATALOG FOR ADDITIONAL PART SUFFIXES TO INDICATE PACKAGE QUANTITY.
2. DIMENSIONS IN PARNETHESES ARE IN METRIC.

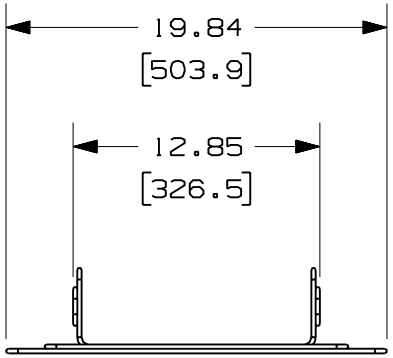

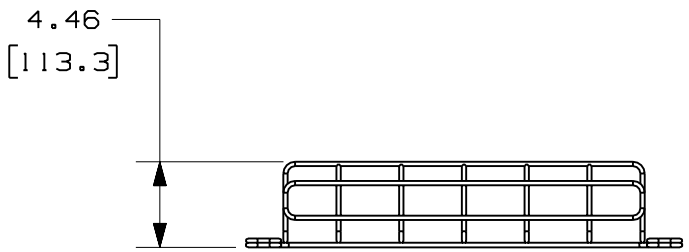

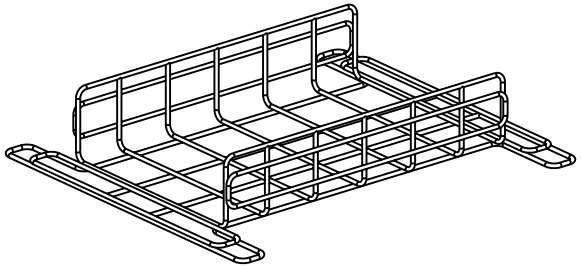

ENG. REF.: D39065JQ_DC/00 GR12X4X24

REV	DATE	BY	CHK	DESCRIPTION	ECN - R	CUST	SUP	GMBH
R	10-30-07	MSO	SABR	RELEASED TO PRODUCTION	39065-64	RN	RN	

CAD FILENAME/LAYERS: GR12X4X24PG.pdf

PANDUIT CORP TINLEY PARK, ILLINOIS

GRIDRUNNER 12x4x24 WIRE BASKET (GR12X4X24PG)
CUSTOMER DRAWING

UNLESS OTHERWISE SPECIFIED, DIMENSIONAL TOLERANCES ARE:
(.X) ± (.XXX) ±
(.XX) ± .05 (1.3) ANGLES ±

UNLESS OTHERWISE SPECIFIED, ALL DIMENSIONS ARE GIVEN IN INCHES, THIRD ANGLE PROJECTION.

DRAWN BY: MSO
DATE: 10-30-07
CHK'D: SABR
MAT'L: PRE-GALVANIZED STEEL WIRE
SCALE: NONE
DRAWING NO.: 39065-64
DWG SIZE: A