SHEET OF

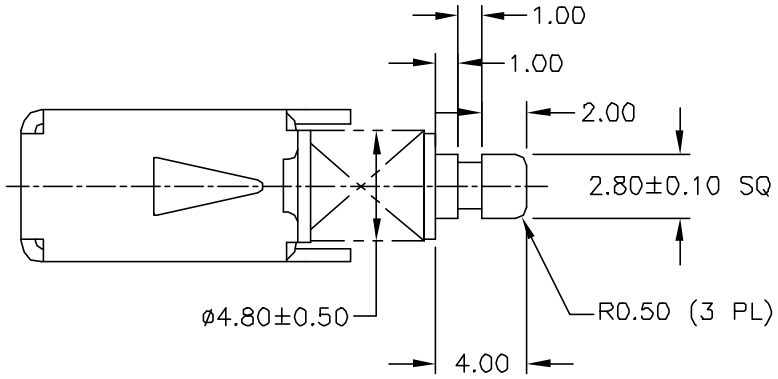

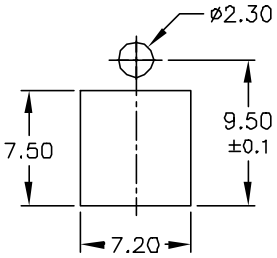

PANEL CUTOUT
SCALE 2X

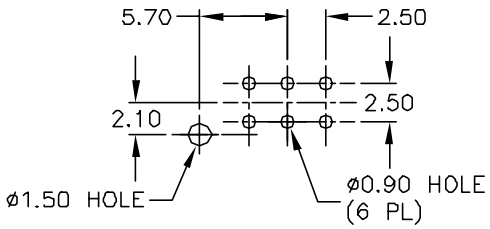

RECOMMENDED P.C.B. LAYOUT
SCALE 2X

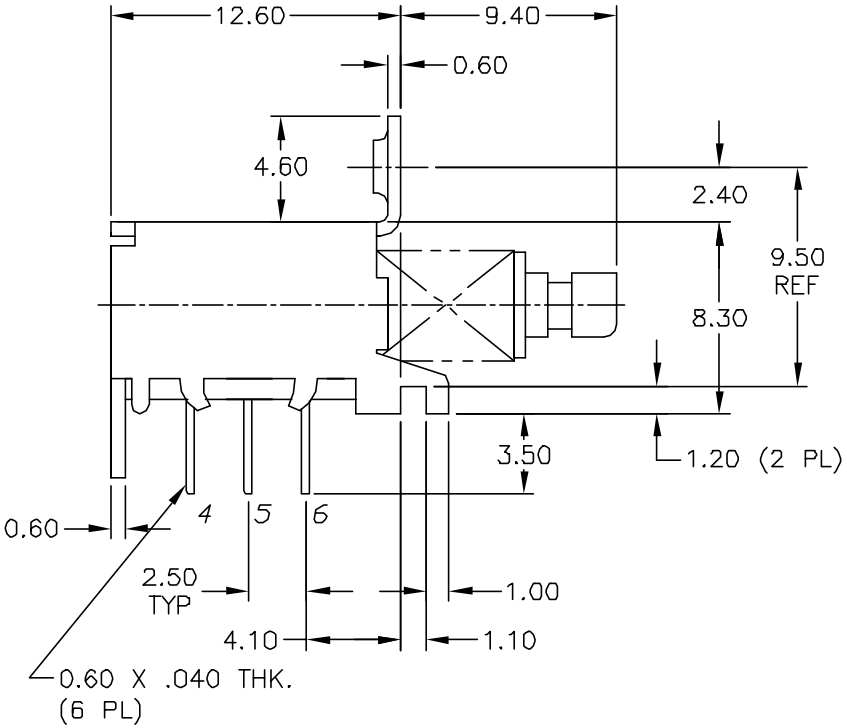

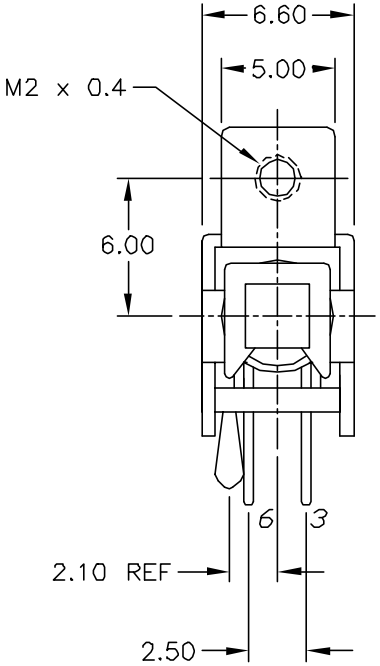

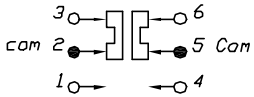

DPDT CIRCUIT

NOTES
1. ALL DIMENSIONS IN MM
2. GENERAL TOLERANCE: X.X=±0.4, X.XX=±0.25
3. TERM NOS FOR REF ONLY.
4. RATING: 30VDC, 0.3A
5. OPERATING FORCE: 330±100GF
6. TRAVEL: FULL 3.5MM: LOCK 2.5MM
7. CONTACT RESISTANCE: 100 MILLI-Ω MAX
8. INSULATION RESISTANCE:
   500VDC-100 MEGA-Ω MIN
9. WITHSTAND VOLTAGE:
   500VAC FOR 1 MINUTE
10. OPERATING TEMP: -20° TO 80°C
11. ELECTRICAL LIFE: 10,000 CYCLES MIN
12. TIMING: SHORTING (MBB)

REV.	ECN No.	DESCRIPTION	DATE	CHKD
A	11534	RELEASED FOR PRODUCTION	6/8/01	CJB

THE INFORMATION CONTAINED IN THIS DOCUMENT IS PROPRIETARY TO E-SWITCH AND IS NOT TO BE COPIED OR TRANSFERRED

E-SWITCH®

TITLE: LC2258 EE SP (LATCHING)

SCALE	DATE	DR	DWG	REV
3:1	6/8/01	CJB	P070215	A